# 110 Tunnel Screen

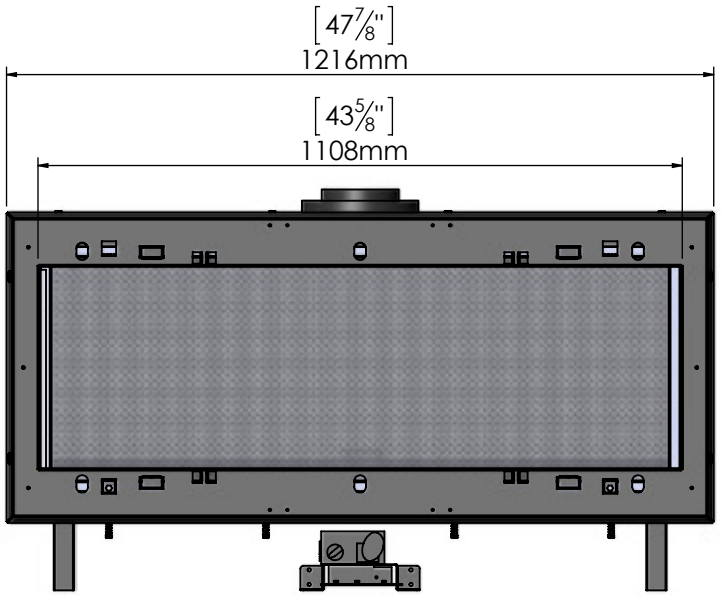


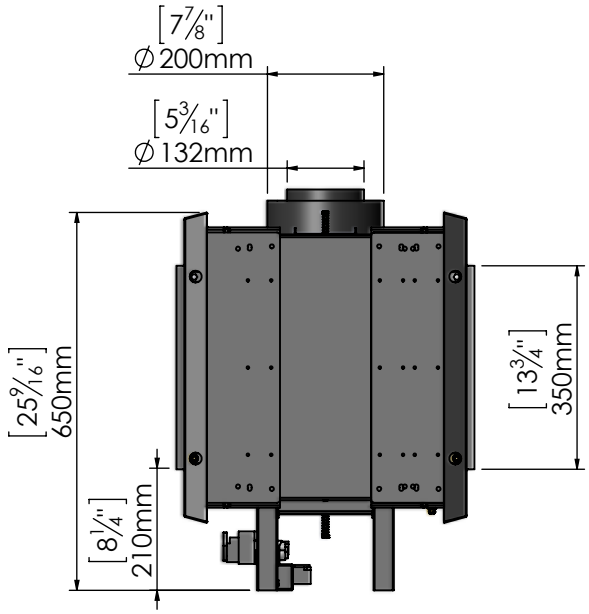


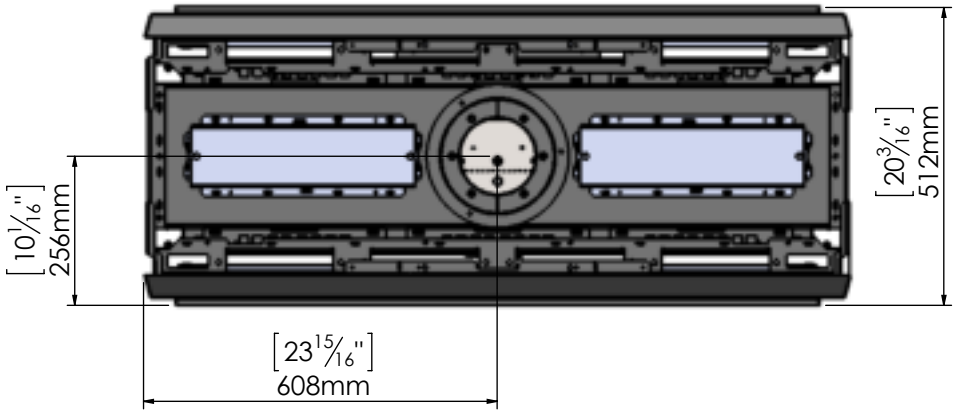


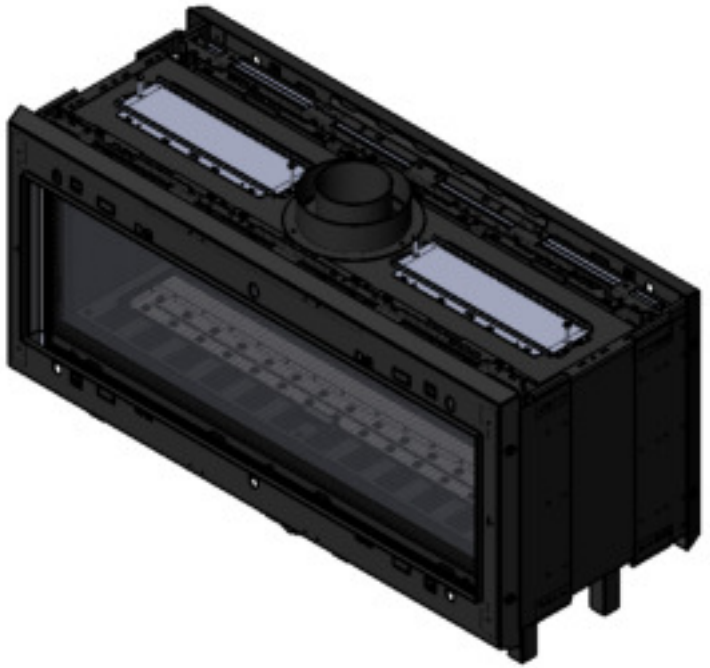

8/9/2017