ORTAL
YOUR LIFE. YOUR FIRE

150 TS

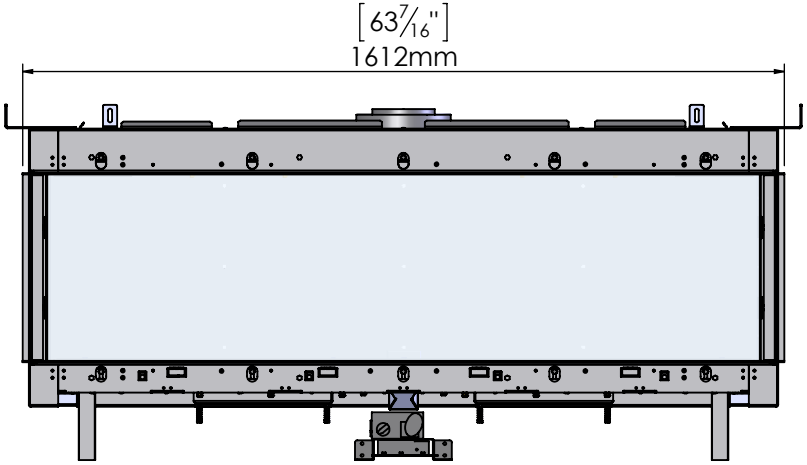

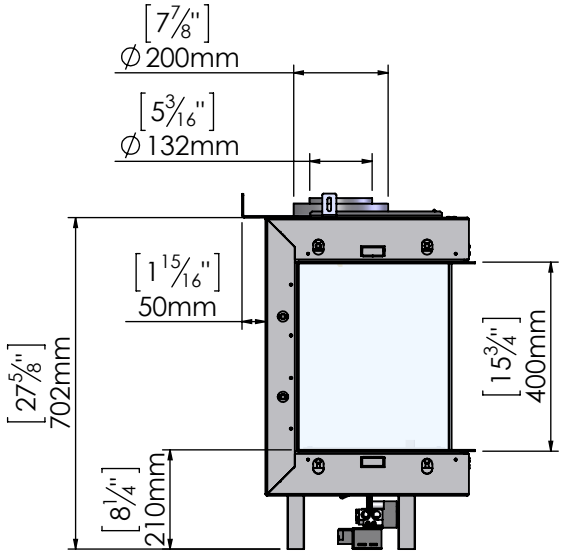

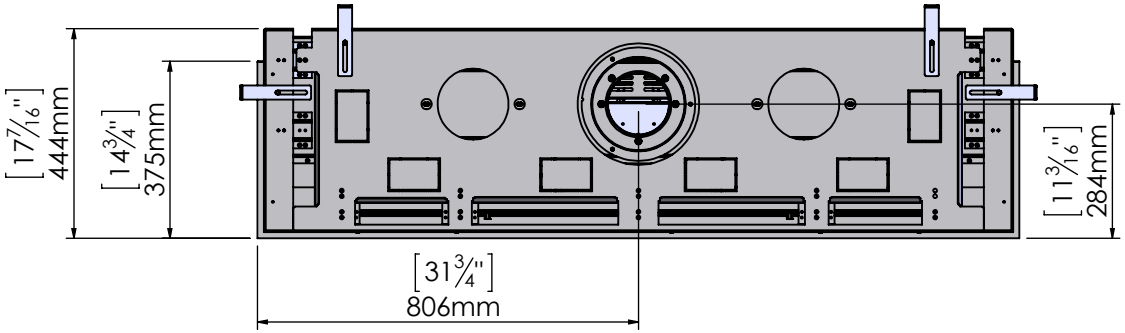

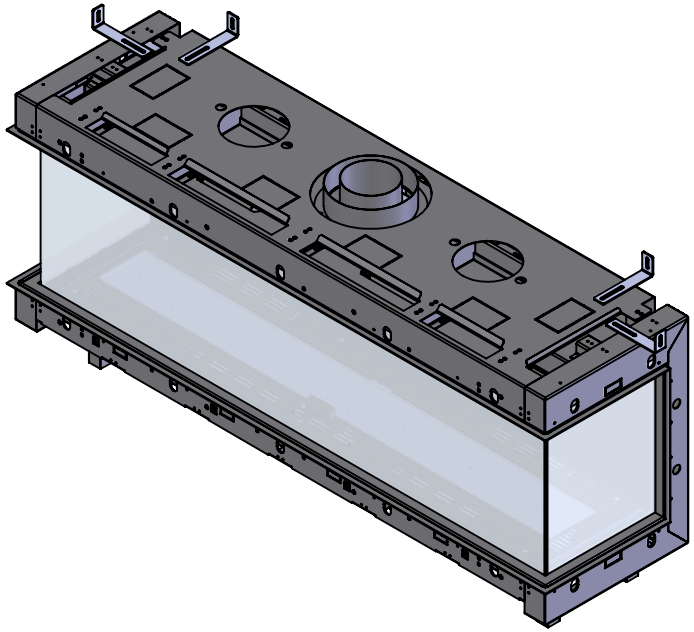

8/8/2017